RINSE TANK CONDUCTIVITY CONTROLLER

OPERATION AND SERVICE GUIDE
O-790C
JULY 1994

Models CC 95 & CC 97

Units shipped after 5/94.

PLEASE READ THIS THROUGH COMPLETELY BEFORE ATTEMPTING TO INSTALL OR OPERATE THIS SYSTEM.

SAFETY PRECAUTIONS BEFORE STARTING PUMP

1. Read Operating Instructions and Instructions supplied with chemicals to be used.
2. Refer to chemical Resistance Data Chart for compatibility of materials in pump with solution to be used.
3. Note temperature and pressure limitations.
4. Personnel operating pump should always wear suitable protective clothing: face mask or goggles, apron and gloves.
5. All piping must be supported and aligned independently of the pump.
6. Always close valves slowly to avoid hydraulic shock.
7. Ensure that all fittings and connections are properlytightened.

BEFORE CHANGING APPLICATION OR PERFORMING MAINTENANCE:

1. Wear protective clothing as described in Item 4 above.
2. Flush pump thoroughly with a neutralizing solution to prevent possible harm to personnel.
3. Verify compatibility of materials as stated in Item 2 above.

DESCRIPTION

The Rinse Tank System is a fully automatic control which will greatly reduce the amount of water used in continuous flow rinse tanks. At the same time, it automatically maintains water quality, insuring effective rinsing in water up to 180°F (82°C). It operates on the electrical conductivity principle and is fully stable and protected against all environmental conditions including temperature, line voltage, water contamination and corrosion.

Rinse Tank System has three major parts:

1. Controller box which reduces line voltage to the sensor and solenoid valve to a safe level and contains the output relay to the valve.

2. 1" Solenoid Valve (normally closed) with adjustable flow control and manual override features.

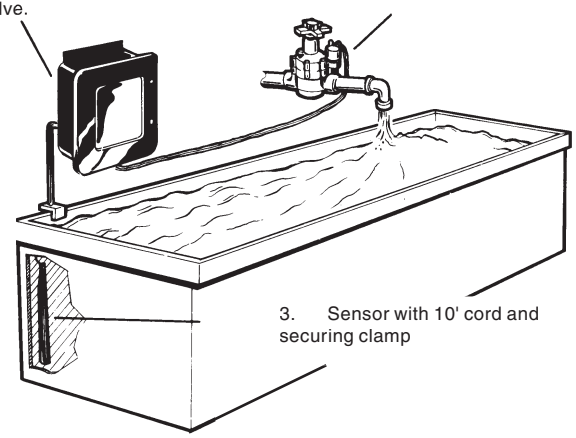

3. Sensor with 10' cord and securing clamp

After installation, the sensor is submerged in the rinse water. When contamination (dragin) accumulates beyond the point "safe" for good rinsing, the sensor automatically opens the Solenoid Valve. Fresh water flows into the tank and as excessive contamination is diluted back to the "safe" level, the sensor closes the valve, limiting water use.

INSTALLATION AND OPERATION PROCEDURES

A. MOUNTING
MODEL CC-95

Follow local electrical code

CAUTION: Do not apply power until all wiring has been completed and connections checked.

1. Mount the Controller Box near the correct AC power as indicated on your unit. It may be hung on a wall, panel, or post.

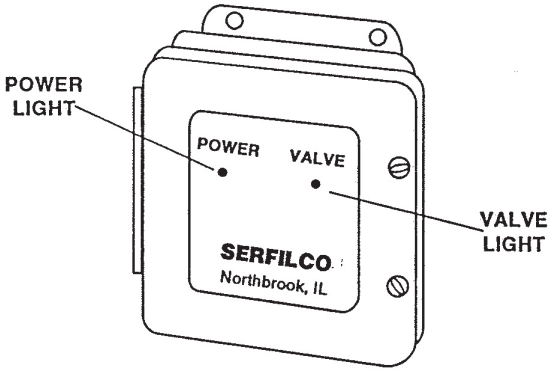

2. Hang sensor in the tank by the cord, using the securing clamp to hold the cord onto the edge of the tank. The sensor should hang vertically, fully submerged at least 4" (10 cm) off the tank bottom and not closer than 2'(60 cm) to the inlet water line. If tank is small, locate sensor at end opposite from inlet.

MODEL CC-97

1. CONTROLLER BOX

   NOTE: 220 VAC Models, see Section C.1 before proceeding.

CAUTION: Do not apply power until all wiring has been completed and connections checked.

a. For panel mounting, cut 3.96 in. (101mm x 5 in. (127 mm) hole in panel (template on back page can be used). Drill two holes in panel. Holes should be .089 in.(2.3mm) if using self-tapping screws; .113 in.(2.9mm) if using bolts/nuts provided. Attach to panel through lower (without brass inserts) box flange holes.

b. If surface mounting, first attach the supplied Surface Mounting Plate to the rear of the controller box with the two (2) ¼" -20 screws provided. Use appropriate screws or bolts (not provided) to then mount the box/plate assembly to a suitable surface.

c. Following electrical connections detailed below, front face plate is snapped on (gasket seal requires some pressure) and attached using black screws (provided).

2. SENSOR

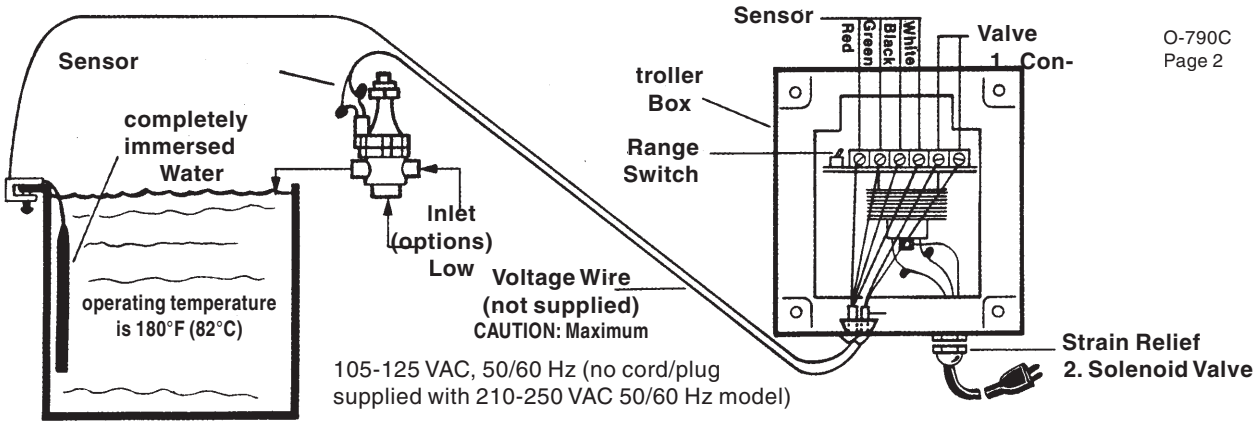

Hang sensor in the tank by the cord, using the secured clamp to hold the cord onto the edge of the tank. The sensor should hang vertically, fully submerged at least 4 inches (100mm) off the tank bottom and not closer than 2 feet (61cm) to the inlet water line. if tank is small locate sensor at end opposite from inlet.

NOTE: If water rate is slow or if dragin rate and concentration prevent good diffusion of contamination . . . the following should be considered to insure the sensor senses water which is "representative" of the entire tank:

a. Agitation - by Eductors or other means
b. Installation of weir in tank perpendicular to water flow
c. Use a sparger on inlet

B. PIPING

1. Install valve in inlet water line to rinse tank so that flow direction is as indicated by the arrows on the top of valve body.
2. Use Teflon tape on all connections and plug the unused inlet.
3. Insure flow control is at least partially open by turning counterclockwise.

NOTE: The 1 inch NPT valve supplied requires at least 10 PSI (69kPa) line pressure to operate. Increasing flow rate may allow valve to operate at lower pressure.

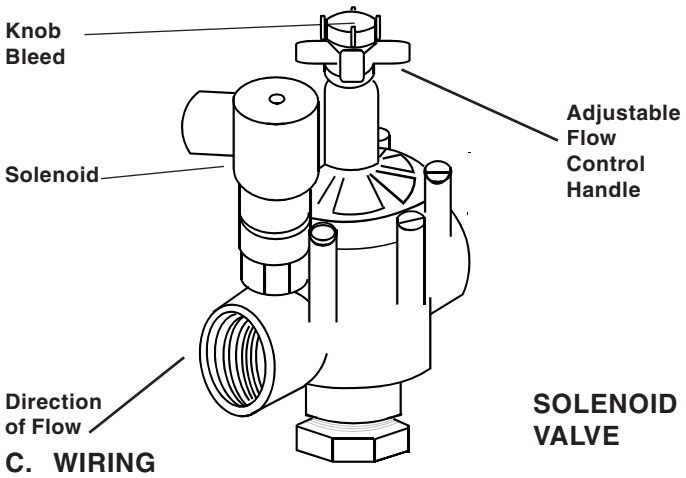

C. WIRING

NOTE: 110VAC systems - proceed to Section C.4 below.

1. For 220 VAC systems: remove four screws in base plate and lift out entire transformer electronics assembly.
2. If it is permissible for power line to share same opening as valve and sensor cables, this is easiest method. If the 220 VAC power line must be separate, CAREFULLY cut the edges of the preferred "knockout" with a sharp knife to remove. The power line should then be attached to the two transformer leads with wire nuts. Be certain to also attach earth to the screw on the side of the transformer.
3. Return transformer electronics assembly to box and screw down baseplate.
4. Insert sensor cable through the slotted plastic plug in box side. Connect the four color coded wires to the terminals marked.
5. Obtain enough low voltage wire (at least 20 gauge/.9398mm diameter) to connect solenoid valve to Controller Box. Use pliers to attach spade lugs (provided) to wire. Connect lugs to terminal strip screws in box marked VALVE as in diagram.
6. Recheck to be certain all connections are to correct terminals.

CAUTION: **DO NOT** short or connect the sensor to the terminals marked VALVE; damage may result.

D. TESTING

1. If controlling ordinary tap water, make sure Controller Box Range toggle switch is set on "HI" (toward back of box). If controlling purified (such as deionized) water, switch should be forward in "LO" position. Also, sensor pointer should face in direction of High (500-5000 micromhos) or Low (5-500) scale to agree with box range switch setting. To change pointer loosen set screw with 9/64 inch Allen wrench. Turn pointer to opposite scale. Lift the rod to the other side of the set screw and place back under the wide part of the pointer plate. Retighten set screw with fingers, allowing inside probe to move within sheath.
2. Turn on the power by connecting the Controller Box to 120 Volt AC (or correct voltage for model being installed). POWER light on Controller Box will glow.

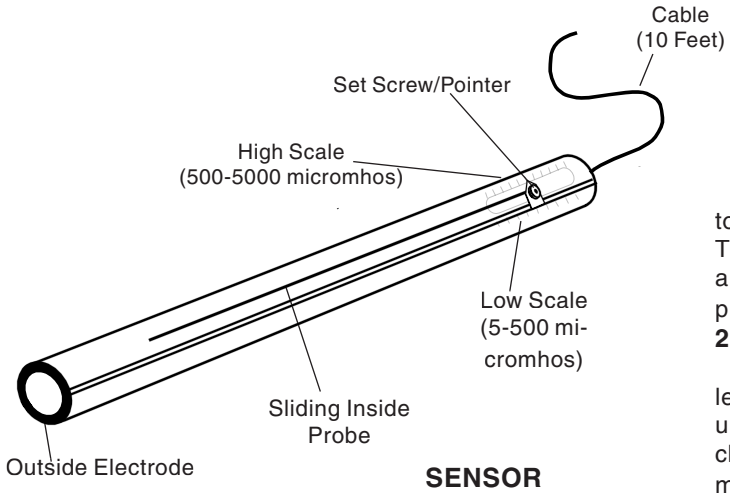

SENSOR

3. Bring sensor electrodes together by sliding the inside probe completely forward. Use a screwdriver to "short" the inside cone electrode to the outside band electrode. This "short" will turn on valve; VALVE light on Controller Box will glow and valve will open.
4. Remove "short" between electrodes. VALVE light will go out and valve will shut off.

E. INITIAL SETTING AND OPERATION

1. Fill pail with water from rinse tank inlet water line.
2. Move inside probe of the sensor back to highest scale reading and submerge into pail of water.
3. Slowly push inside probe toward opposite end, stopping when solenoid Valve triggers and VALVE light goes on. Water will begin to flow into the tank. Read scale.
4. For the initial setting, move the inside probe back to read at least 25% higher than the scale reading in Step 3. Tighten set screw with 9/64" Allen wrench (finger tight is not sufficient).
5. Place the sensor back into the rinse tank as described under Section A. Mounting, number 2. Fasten the cord with the securing clamp provided.
6. Check setting and overall operation by rinsing parts or by pouring a small amount of acid or alkaline solution into the rinse tank to trigger the Solenoid Valve and start water flow.
7. Adjust valve flow control handle to obtain desired flow rate. Check through at least one complete on/off cycle. To bleed valve hold the cross handle firmly and loosen (counter-clockwise) the bolt in the center of the stem. Some water will spurt out at the stem while it is under manual control.

NOTE: The best sensor setting can be determined with experience. Since the main objective of the system is to conserve water use, a high conductivity setting on the sensor is desirable . . . as long as the water does not become too dirty, preventing effective rinsing. However, if the sensor is set too low, the water will flow continuously due to the normal conductivity (total dissolved solids) in source water - defeating the purpose of the system.

MAINTENANCE

1. SENSOR

Although this system is very stable, the sensor should be regularly checked for hard water scale, which will lower its sensitivity. Scale can be easily removed by agitating sensor in a 2-10% hydrochloric acid solution. If scale has been allowed to build up for a long period, a bristle brush may also be used. The sensor may be disassembled by removing the set screw and thoroughly cleaned if it should accidentally become completely fouled.

2. VALVE

Should the Rinse Tank system no longer activate the Solenoid Valve when the inside probe is intentionally "shorted", unscrew the solenoid from the side of the valve and check the chamber for any solid matter which may prevent easy solenoid movement.

CONVERSION TABLE

TDS instruments that are used for the determination of dissolved solids in water are basically water conductivity measuring instruments. The fact that the quantity of dissolved solids in parts per million by weight is directly proportional to conductivity in micromhos per unit volume, makes possible the use of a conductivity measurement to indicate the amount of dissolved solids in a water sample. Table 1 shows the relationship of sodium chloride and calcium carbonate in parts per million vs. conductivity in micromhos. The average drinking water contains other dissolved solids as well as sodium chloride. These have a higher weight per ion and, therefore, are higher in parts per million for a conductivity value. TDS meters are calibrated to more closely approximate municipal water characteristics. Table 1 shows the TDS calibration vs. micromhos, which is the accepted calibration used for conductivity instruments.

Table 1

TDS PPM	‰Mhos	NaC1 PPM	$CaC0_3$ PPM
10,000	15,000	8400	7250
6660	10,000	5550	4700
5000	7500	4000	3450
4000	6000	3200	2700
3000	4500	2350	2000
2000	3000	1550	1300
1000	1500	750	640
750	1125	560	475
666	1000	490	420
500	750	365	315
400	600	285	250
250	375	175	150
100	150	71	60
66	100	47	40
50	75	35	30
40	60	28	24
25	37.5	17.5	15
6.6	10	4.7	4

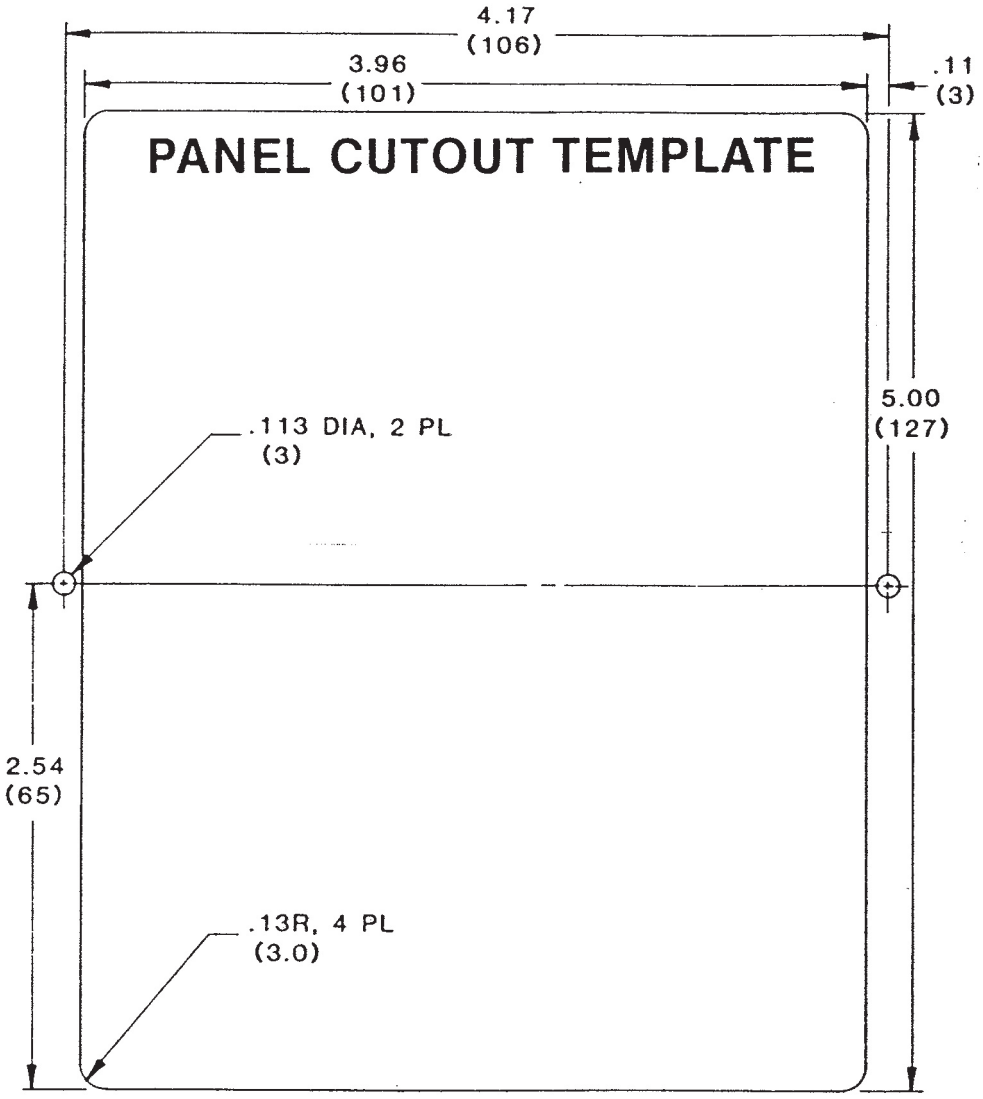

DISTRIBUTED BY

SERFILCO®, LTD.
2900 MacArthur Blvd.
Northbrook, IL 60062-2005 U.S.A.
e-mail: sales@serfilco.com
847-509-2900
800-323-5431
FAX: 847-559-1995
www.serfilco.com